CHARACTERIZATION OF AN ORGANIC RANKINE CYCLE SYSTEM FOR WASTE HEAT RECOVERY FROM HEAVY-DUTY ENGINE COOLANT AND EXHAUST

Sandhya Thantla[1]*, Jonas Aspfors[2], Jens Fridh[3], Anders Christiansen Erlandsson[4]

[1,3,4] KTH Royal Institute of Technology,
Stockholm, Sweden
sandhyat@kth.se
jens.fridh@energy.kth.se
ace@itm.kth.se

[2]Scania CV AB,
Sodertalje, Stockholm, Sweden
jonas.aspfors@scania.com

* Corresponding Author

ABSTRACT

To meet the strict legislations imposed on carbon-dioxide emissions, organic Rankine cycle (ORC) waste heat recovery (WHR) technology is being extensively studied and applied in long haulage heavy-duty (HD) truck engines. The focus of this paper is to characterize an ORC system of a HD long-haulage commercial truck engine that uses single and dual heat sources for WHR. The main objective of this work is to estimate the improvement in the system's performance when the number of heat sources is increased. Two different WHR configurations: (i) integrated with the engine exhaust and (ii) integrated with both the engine coolant and the exhaust, are studied using the 1D simulation tool GT-Suite. Two types of scroll expanders, adopted from literature, are used in the ORC system configurations to analyze and compare their effect on the overall performance of the engine. Performance of the scroll expanders are generated from their semi-empirical models and R1233zD is used as the working fluid. With engine exhaust as the only heat source, both the expanders exhibit similar performance potentials at their optimum speeds. With two heat sources, fuel-saving is considerably improved, provided the coolant temperature is increased to 120°C and above. For the chosen conditions, expander A, at its optimum coolant temperature of 150ºC, leads to around 5.7% fuel-saving; whereas, expander B, at its optimum coolant temperature of 130ºC, leads to 5.5% fuel-saving. Further, this paper discusses the effect of expander speeds, expander volumes and superheating on the overall system efficiency.

1. INTRODUCTION

Legislations on CO_2 emissions demand improvement in fuel economy of Heavy-Duty (HD) truck engines. This, in turn, has spurred engine manufacturers and researchers to investigate different potential energy saving/extraction methods. One such common method of energy extraction in the HD commercial vehicles industry is the ORC WHR technique. The work carried out by Espinosa *et al.* (2010), throws light on the constraints of a typical ORC WHR system on a heavy duty engine, not only in terms of pressure losses but also on the usability of the working fluids and their environmental impact. Scroll expanders are widely used in the ORC WHR system and have been found to be the most efficient form of expansion devices for such heat recovery applications (Imran *et al.,* 2016). Lemort *et al.* (2014), in an interesting study, show the importance of system level thinking while integrating the WHR components to the engine. Ziviani *et al.* (2014) showed that the area of low temperature WHR is currently booming with several research activities related to design, system architecture, heat transfer and quantification of losses. The majority of the work available in the literature seems to be focused on optimizing the system in terms of fuel efficiency by choosing the high load operating point of the engine. However, in order to optimize the engine for its entire operating regime, it is imperative to

focus on off-design operating conditions wherein the quality of heat available may not be as high but can still be a potential source for low temperature heat recovery. Considering the different aspects of the low temperature WHR, it is essential to consider the system aspects of the problem. This, in turn, could lead to exploration of other heat sources available on the engine. One such work carried out by Arunachalam *et. al.* (2012), shows heat recovery potential from multiple sources on the engine. In addition, it is interesting to note that the coolant used in the engine is considered to be a potential heat source for energy recovery as well. In literature, it is rare to find simulation studies that discuss the overall performance of a full-sized HD truck engine with a WHR system, focusing on the actual performance details of the WHR components. One such component is the expansion machine whose technology and performance factors are not given much importance to at the system level, despite it being the most crucial component in converting heat into work. This paper addresses the limitations set by the boundary conditions on the expansion machine/working fluid in operating at its fullest potential and vice-versa. A good matching between the expander choice, working fluid and cycle conditions is really important to maximize the fuel economy (Grelet *et al.,* 2014). Furthermore, this paper discusses the response of the engine, in terms of overall system efficiency and fuel-saving potential, while recovering heat from both low temperature and high temperature heat sources, such as engine coolant and exhaust.

2.METHOD

2.1 1D Model of Engine and WHR System

This simulation study is performed with two types of circuits for WHR using the ORC system. They are, (i) Single-Source (SS) circuit for heat recovery only from the exhaust gas of the engine; (ii) Dual-Source (DS) circuit for heat recovery from both the engine exhaust and the engine coolant. The analysis is carried out using a 1D model representing an integrated HD engine and ORC WHR system, implemented in GT-SUITE (GT-SUITE *version 2018*). The 1D model is developed based on a real-time long haulage HD truck engine and its WHR system. The overall performance of the (Engine + WHR) system, with all the integrated components for WHR, is predicted using this model.

2.1.1. Single-Source circuit – Engine exhaust only: The schematic layout of the SS circuit for heat recovery only from the engine exhaust is shown in Figure 1(a). It has a High-Pressure (HP) feed pump, an exhaust Evaporator, a HP expander, a Recuperator, a Condenser and a pressure-controlled tank. Superheating at expander inlet is controlled by varying the speed of the electrically driven feed pump (with fixed pump, motor and generator efficiencies of 60%, 80% and 85%, respectively). The degree of sub-cooling before the feed pump is controlled by varying the pressure in the tank. Working fluid in the condenser is cooled by water that passes through the Low-Temperature (LT) radiator (LTRAD) placed in between Charge-air-cooler (CAC) and High-Temperature (HT) Radiator (HTRAD); cooling water is pumped through the LT Coolant pump. HP expander is mechanically connected to the engine drive-train. From the tank, the working fluid R1233zD (black lines) goes through the HP feed pump, Recuperator, Evaporator, HP expander, Recuperator again and finally into the Condenser. The net power produced by the SS system, the overall system efficiency and the fuel-saving are calculated, respectively, using Equations 1, 2 and 3:

$$\dot{W}_{net,SS} = \dot{W}_{HPexp} - \dot{W}_{HPpump} - \dot{W}_{LTcoolant\_pump} \quad (1)$$

$$Sys_{eff_{SS}} = \frac{\dot{W}_{net,SS}}{\dot{m}_{exh}(h_{exh,in} - h_{exh,out})} \quad (2)\ ; \qquad FS = \frac{\dot{W}_{WHR\_net}\frac{dm_{fuel}}{dW_{eng}}}{\dot{W}_{eng}BSFC} \quad (3)$$

The term $\frac{\frac{dm_{fuel}}{dW_{eng}}}{BSFC}$ (g/kWh), which is the change in fuel amount for a change in engine work, is 0.86 at the 112 kW operating point chosen in this study. This term usually increases with the engine power and varies typically between 0.8 (low load) and 1.1 (full load).

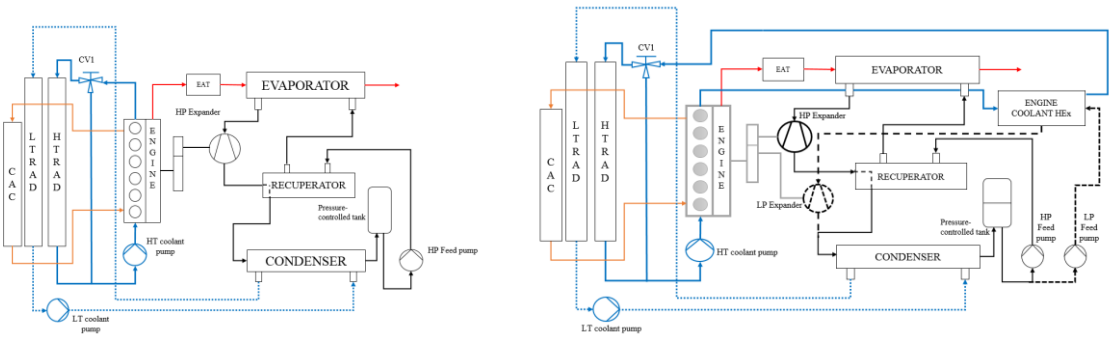

(a) (b)

Figure 1: Schematic layout of the engine with ORC WHR system – (a) Single source; (b) Dual source

2.1.2. Dual-Source circuit – Engine exhaust and coolant: Schematic layout of the DS circuit is shown in Figure 1(b). In addition to the existing SS circuit, an extra heat exchanger (Engine Coolant HEx) is added in the DS setup to recover heat from the engine coolant (solid blue line). In the DS setup, another circuit is added with LP Feed pump and LP expander (mechanically coupled to the engine). As a control strategy, temperature at the inlet of LP expander is set equal to the engine temperature i.e., initial engine coolant temperature with a minimum superheating degree of 20K. However, the Condenser is common for both the circuits; after expansion, working fluid from both the expanders (HP and LP) is cooled in the Condenser. Therefore, in order to use the engine's coolant heat, the working fluid R1233zD goes through the LP Feed pump, Engine Coolant HEx, LP expander, Condenser and ends up in the pressure controlled tank (dashed black line). In short, when using both the engine coolant and the exhaust as heat sources, the working fluid goes through both the HP circuit and the LP circuit (black lines). For DS WHR, fuel-saving is calculated using Equation (3). However, Equations (4 and 5) are used for calculating the net power output and the system efficiency, respectively.

$$\dot{W}_{net,DS} = \dot{W}_{HPexp} + \dot{W}_{LPexp} - \dot{W}_{HPpump} - \dot{W}_{LPpump} - \dot{W}_{LTcoolant\_pump} \tag{4}$$

$$Sys_{eff_{DS}} = \frac{\dot{W}_{net,DS}}{\dot{m}_{exh}(h_{exh,in} - h_{exh,out}) - \dot{Q}_{eng2coolant}} \tag{5}$$

2.1.3 Expander component in the 1D model: To simulate the performance of the HD engine equipped with the WHR system, two types of scroll expanders are represented using their performance maps in the 1D system model. The performance maps of the scroll expanders are generated using the semi-empirical model (Lemort *et al*., 2009), details of which are given in the next sub-section. In this study, performance of the system with each of the scroll expanders is compared; same type of the expander is used in both the HP and LP circuits in the case of DS WHR. However, the displacement volume of the LP expander is twice in size than that of the HP expander, as this combination of sizes was found to be the optimum in preliminary studies.

2.2 Representing the scroll expanders in the 1D model

Performance of the chosen HD engine, with the integrated ORC WHR system, is predicted based on the choice of two scroll expanders chosen from the literature: (i) an open-drive scroll expander (Lemort *et al*., 2009) and (ii) a hermetic scroll (Lemort *et al*, 2011); hereafter, the expanders will be addressed as expander A and B, respectively. The actual performance of the scroll expanders is predicted using the semi-empirical model proposed by Lemort *et al*. (2009). The calibration parameters of the semi-empirical models of expanders A and B are given in the corresponding reference papers. These expanders are represented in the 1D model through their maps for expander effectiveness and Filling factor predicted by the semi-empirical model against pressure ratio and expander speed. Detailed description of the semi-empirical model is provided by Lemort *et al*. (2009).

2.3 Adopting the semi-empirical models for R1233zD

The calibration parameters of the semi-empirical models of expander A and B are applicable only to the corresponding geometry and the working fluid. However, in this study, though the expander geometry is retained, the working fluid is replaced by R1233zD. For this, the method proposed by Antonio (2014) is used; the author says that the nominal heat transfer coefficients predicted at the expander inlet and outlet, are the only model calibration parameters that are dependent on the working fluid. Therefore, in this work, for the expanders A and B, the heat transfer coefficients were identified for R1233zD using the method proposed by Antonio (2014). Thus, by using the respective calibrated semi-empirical models, actual performance of expanders A and B are predicted using ORCmKit (Dickes *et al.*, 2016).

3. RESULTS

3.1 Single Heat Source – Engine Exhaust Only

3.1.1 Optimum expander speeds: In the 1D model, expander speed is swept to identify the optimum speed for each expander when using R1233zd as the working fluid. Here, expander speeds are presented in the form of specific speed, which helps in selecting the turbomachinery for any application (Kenneth and Nichols, 2012). According to the equation given by Kenneth and Nichols (2012), the specific speed (N_s) is a function of expander speed (N in rpm), volume flow at expander outlet ($V_{ex}^{1/2}$ in ft3/sec) and isentropic enthalpy drop over the expander ($\Delta h_{is}^{3/4}$ in ft.lb/lb). The imperial units are retained in order to refer to the chart presented by the authors. In this paper, Equation (6),

$$N_s = \frac{N V_{ex}^{\frac{1}{2}}}{\Delta h_{is}^{\frac{3}{4}}} \tag{6}$$

provided by Latz *et al*. (2013) is used to calculate the specific speeds of expanders A and B. In this paper, the chart proposed by (Kenneth and Nichols, 2012) is not used to select any expander; instead, the knowledge of specific speed is expected to provide some idea of where the scroll expanders would fall on the chart in terms of the specific speed only. The results for the overall system efficiency, the net power output, the expander pressure ratio and the corresponding fuel-saving in the vehicle are presented in Figure 2, against the expanders' specific speed. As shown in Figure 2, the overall system efficiencies achieved with expanders A and B in the integrated engine and WHR system are more or less equal. The optimum speeds of expanders A and B are 3800 rpm and 7500 rpm, respectively. System efficiency, fuel-saving and the net power achieved with expander A are 8.35%, 4.6% and 6 kW, respectively. With expander B, system efficiency = 8.25%; fuel-saving = 4.5%; Net power = 5.9 kW.

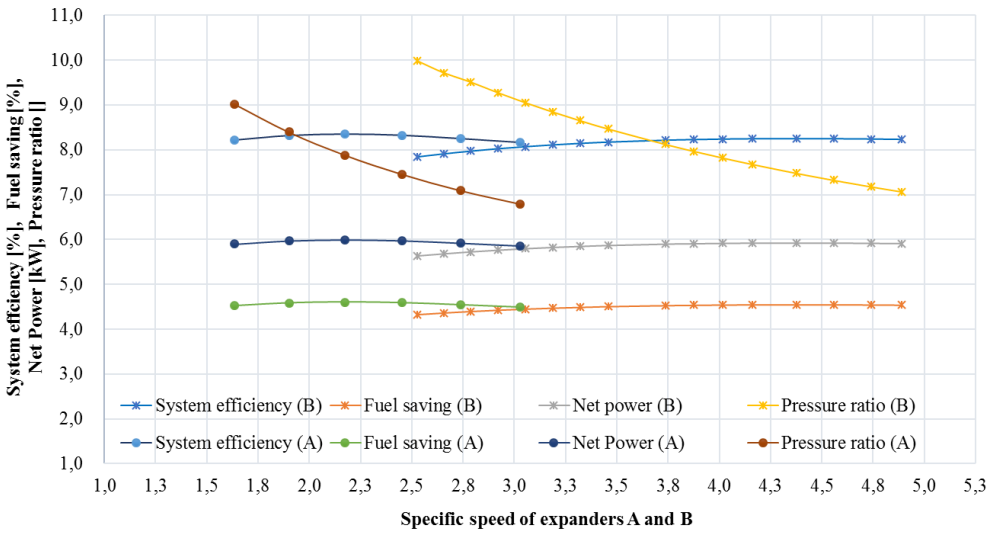

Figure 2: System level performance with expanders A and B (single heat source – exhaust only)

3.1.2 Effect of Superheating at Expander inlet: Superheating the working fluid, at the expander inlet, is one of the effective ways to harvest more waste heat from the engine. Though superheating a wet working fluid has its own advantages such as improved cycle efficiency and avoidance of droplet formations in the expander, superheating a dry working fluid would improve the cycle efficiency if a recuperator is placed at the expander outlet. Hence, to investigate the response of the HD engine to superheating at the expander inlet, various degrees of superheating from 30K to 170K is imposed in the model, with speeds of expander A and B fixed at 3800 rpm and 7500 rpm, respectively. The overall system efficiency plotted against the degree of superheating is shown in Figure 5, for both the expanders A and B. The system efficiency slightly increases with superheating until 110K; this superheating temperature can be considered optimal as a minimal drop in system efficiency can be observed at 120K, after which, the system efficiency is stabilized due to maximum pressure and temperature limits set by the working fluid, R1233zd, at 32.6 bar and 240°C, respectively.

3.2 Dual Heat Source – Engine Exhaust and Coolant

This section presents the results of the HD engine's performance when heat from both the engine exhaust and engine coolant are recovered using the ORC WHR system. It is to be noted that, even though the concept of using more than one heat source to improve system efficiency is lucrative, there are several limitations associated with such a complex system, which is of an interest to investigate in this study. In the DS model setup, the engine coolant temperature is set to 120°C as a baseline value, in order to have a higher quality of heat in the LT heat recovery system.

3.2.1 Optimum Combination of Expander speeds: One of the important settings in the ORC WHR system with respect to the expanders, is their speeds in relation to the engine speed. In this model, since the expanders are mechanically connected to the engine drivetrain, it is crucial to set the expander speeds that could help convert heat into as much power as possible. Hence, this part of the section is attributed to identifying the optimum combination of HP and LP expander speeds that lead to a higher possible system efficiency (Sys_eff_{DS}). Various combinations of HP and LP expander speeds, as shown in Figure 3, have been considered in order to achieve higher system efficiencies. The range of chosen expander speeds are, for expander A: HP (2000 – 5000 rpm); LP (1000 – 3500 rpm) and for expander B: HP (2800 – 6000 rpm); LP (1000 – 4500 rpm). The displacement volume of the LP expander is twice than that of the HP expander; also, only one expander type (A or B) has been used for each analysis in both the HP and LP circuits i.e., results from combination of both the expanders in HP and LP circuits are not presented in this paper. In the DS setup, system efficiencies of the chosen expander speeds lie between 4% and 7%. Instead of specific speeds, actual speeds of the expanders are presented here to represent the differences in LP and HP expander speeds. For the chosen engine operating point and conditions of the WHR system, with expander A, the optimum combination of expander speeds is 3400 rpm (HP) and 1000 rpm (LP); DS system efficiency and DS fuel-saving are 5.98% and 5.05%, respectively. The net power output produced by the DS system is 6.6 kW. With expander B, the optimum speeds are 5500 rpm (HP) and 3500 rpm (LP) with system efficiency at 6.26%; net power produced is 6.86kW; expected fuel-saving is around 5.3%. On comparing the expanders at the system level, expander B shows a higher performance than expander A.

3.2.2 Effect of Increased Engine Coolant temperatures and Superheating: The effect of increasing engine coolant temperatures on the DS system efficiency, net power and fuel-saving, with expanders A and B, is presented in Figure 4. Expander(s) are fixed at their respective optimum speeds mentioned in Figure 3; Superheating at the HP expander's inlet is fixed at 45K. With expander A, the system efficiency significantly improves until the engine coolant temperature is increased to 150°C; it increases slightly when the coolant temperature is 160°C. However, the net power and fuel-saving begin to drop from 160°C. Similar effect can be seen with expander B as well, but the system efficiency begins to drop from 150°C onwards; fuel-saving and net power begin to drop from 140°C onwards. By comparison, expander B leads to a higher fuel-saving than A at coolant temperatures between 120°C – 130°C. However, expander A leads to higher fuel-saving than B at coolant temperatures 90°C and 140°C – 160°C. At 90°C, contribution from the LP circuit with expanders A and B is just 0.2 kW and 0.5 kW, respectively. Therefore, it is presumed that HP circuit's performance of expander A is contributing

towards higher fuel-saving than expander B at 90ºC engine coolant temperature. The effect of the degree of superheating at the HP expander's inlet is presented in Figure 5. Expander speeds are kept constant at their respective optima mentioned in Figure 3 and the engine coolant temperature is fixed at 120ºC. In the DS setup, similar to the SS setup, superheating the working fluid at the HP expander's inlet does not significantly improve the system efficiency despite the presence of recuperator.

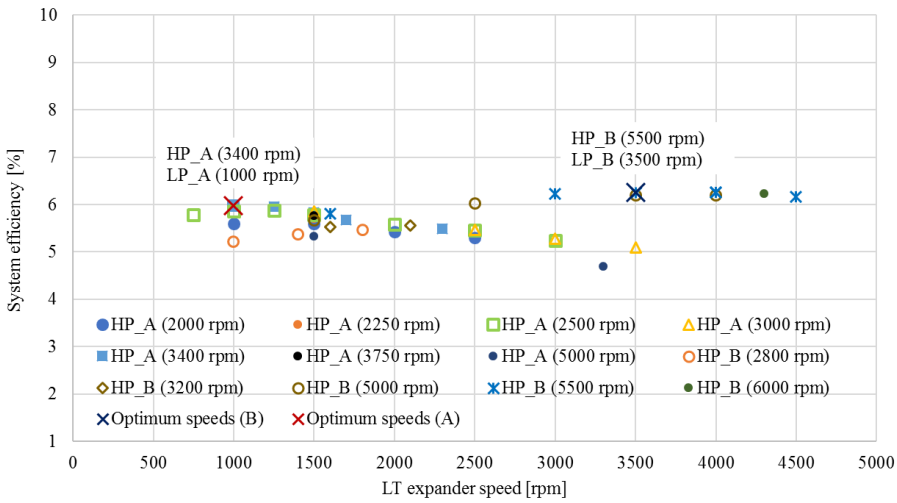

Figure 3: Optimum speeds of HP and LP expanders (A & B) – DS setup

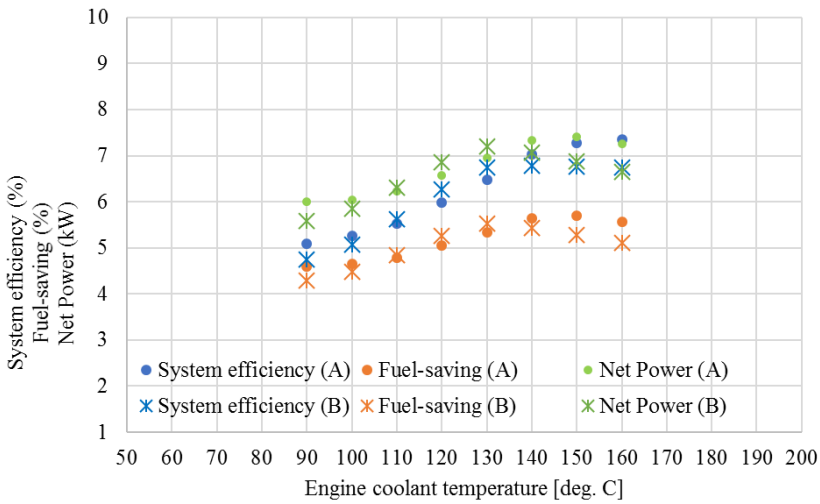

Figure 4: Effect of increasing the engine coolant temperature in DS WHR (expanders A & B)

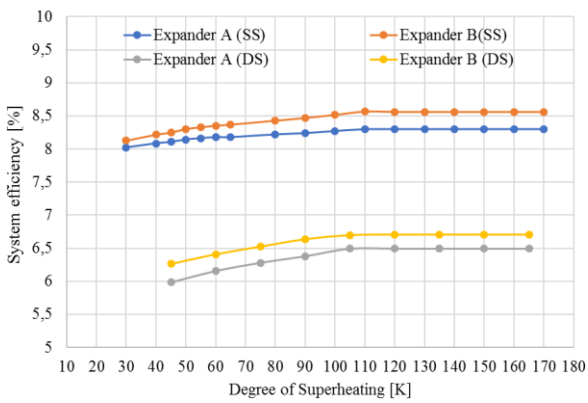

Figure 5: Effect of Superheating the fluid at HP expander's inlet (SS and DS)

4. DISCUSSION

Performance evaluation of the system encompassing an engine of a HD long haulage truck and ORC WHR system, is carried out based on two aspects: (1) recovering waste heat from engine exhaust only and from both engine coolant and exhaust; (2) configuring the open-drive and hermetic scroll expanders for effective performance at the system level. The integration of actual expander performance maps with the 1D system model portray close-to-real time characteristics of the entire engine and WHR system. This leads to an advantage of not getting over-estimated results for the imposed boundary conditions, which is likely to happen when assuming constant expander efficiencies instead of predicting the actual ones.

4.1 Heat recovery from engine exhaust only (SS)

4.1.1 Expander speeds: As shown in Figure 2, in a system with only engine exhaust as the heat source, scroll expanders A and B display similar performance potentials. However, expander A is optimum at lower specific speeds of expanders, whereas, expander B is optimum at higher specific speeds. Specific speed is a direct function of expander speed (Equation (6)). However, optimum system efficiency with expander A is achieved at a lower specific speed (3800 rpm); whereas, the optimum with expander B is achieved at a specific speed higher than that of expander A (7500 rpm). This reflects the effect of displacement volume of each expander. Expander A, which has a higher displacement volume and Built-in Volume Ratio (BVR) than expander B, shows its potential in the range of lower specific speeds. The system ends up with very much the same optimal pressure ratio (PR) and volume flow with both the expanders.

4.1.2 Expander size: Displacement volume and BVR of expander A are 36.54 cm^3 and 4.05, respectively. A's geometry is bigger than B, whose displacement volume and BVR are 22.4 cm^3 and 2.85, respectively. These geometric dissimilarities determine the optimum expander speeds. Higher built-in volume ratios contribute to improved system efficiencies since they could be efficient at higher pressure ratios. If the BVR of both the expanders can be increased, the system efficiencies could be even higher leading to improved fuel-saving potential. This shows an importance of sizing the volumetric expanders for automotive WHR applications. If the expanders had smaller volumes but larger built-in volume ratios, system efficiencies could be even higher.

4.1.3: Superheating at expander inlet: The impact of superheating is very minimal on the overall system efficiency and fuel-saving despite the presence of a recuperator at the expander outlet. However, system efficiency with expander B is slightly better than A. According to the literature, presence of a recuperator improves ORC cycle efficiency since high quality vapor is being utilized for pre-heating the working fluid. However, in a transient system such as a HD truck, the effect of superheating is seen constrained due to the boundary conditions set by the hot-side and cold-side heat exchangers. The presence of a recuperator reduces load on the condenser, besides demanding extra space in the vehicle. But, the answer to why there is a minimal effect of superheating needs further investigation. Few thoughts on the minimal effect of superheating in this study are discussed further. In this setup, superheating can be done by just changing the pump speed which, in turn, controls the working fluid's mass flow rate. The reason for the minimal effect could be that in this control system, due to change in mass flow rate of the working fluid with increased superheating, there is not so much change in the pressure ratios across the expander as the expander speed was kept constant. Besides, there is not so much difference in pressures at expander inlet and outlet. Roy *et al.* (2010) say that the effect of superheating is evident with R123 at a higher pressure and temperature. Therefore, since R1233zD has a saturation curve similar to R123, it is presumed that if there is a change in pressure at the expander inlet with increased superheating, the effects of superheating might be more visible. Another aspect observed in this study is that, between the superheating degrees of 30K and 170K, mass flow rate has dropped by about 23%. Besides, enthalpy drop has improved by around 40%. Hence, mass flow rate could be presumed to be a more sensitive parameter when trying to improve system efficiency through superheating from 30K to 170K.

4.2 Heat recovery from both engine exhaust and coolant (DS)

4.2.1 Expander speeds: In an attempt to identify an optimum combination of expander speeds in HP and LP circuits for maximum system efficiency and fuel-saving, different combinations of speeds have been tested. In this investigation the LP expander was picked with twice the size of the HP expander. Thus, it turned out that lower LP expander speed was more beneficial. This observation could be a beneficial effect from a combination of many things, such as the larger size of the expander operating at a lower pressure ratio helps extract more energy from the heat source in an efficient manner, while operating at lower speeds which in turn reduces transmission losses in the expander, thereby contributing to the overall optimum system efficiency. For the given boundary conditions and expander configurations, having same speeds for both HP and LP expanders is also found to be beneficial though not optimum because, optimum expander speeds mainly depend on the choice of expanders and working fluid. Different expanders with different BVR and size can be used to optimize the system for improved efficiency. From this study, expander A seems to be a good choice for the HP circuit and an expander with lower BVR values, such as expander B, but with an optimum displacement volume would be a good choice for the actual heat sources investigated in this paper. The need to choose expanders with lower BVR in the LP circuit is to match its lower pressure ratios (than in the HP circuit). From the results, it is presumed that performance of the HP circuit seems to have a larger impact on the overall system efficiency. It is likely that the system efficiency is largely affected by HP expander's speed and design and thus, even after adding the LP circuit in the system, HP sub-system has the stronger effect. Nevertheless, this hypothesis requires more analyses to be performed in the future.

It is important to consider that an optimum sizing of the baseline expander is highly dependent on the working fluid and boundary conditions; optimal expander configurations may differ for different conditions. With expander A, at optimum speeds, system efficiency and fuel-saving are 5.98% and 5.05%, respectively. With expander B, system efficiency is 6.26% and fuel-saving is around 5.3%. Depending on the choice of the expander, either the LP expander or the HP expander performs at its best for the optimum system efficiency. In this analysis, expander B provides higher system efficiency than A; expanders with smaller BVR are suitable for low-temperature heat recovery such as from engine coolant. Therefore, it is presumed that since the BVR of expander B is smaller than expander A, it has helped improve system efficiency in the DS circuit. That is why, it is possible that higher system efficiency and fuel-saving is achieved with expander B for the chosen conditions and expander configurations. Hence, it is observed that expanders with smaller BVR would be suitable for the LP circuit, whereas, expanders with higher BVR would be optimum for the HP circuit.

4.2.2 Increased coolant temperatures and superheating: A typical method of increasing the available energy is to change the engine coolant temperature, when it is used as the heat source. Effect of increased coolant temperatures on the system efficiency, net power and fuel-saving in the DS setup, with both the expanders A and B, is illustrated in Figure 4. Significant improvement in system efficiency is achieved when the engine coolant's temperature is raised. This is because the Carnot efficiency of the system is increased due to improved quality of heat recovery from the engine. However, at even higher coolant temperatures, decrease in the performance could be attributed to the decrease in coolant power (transferred from the engine) and to the increase in heat loss to the engine's surroundings. For both the expanders, there is an optimum engine coolant temperature for higher net power and fuel-saving. It is interesting to note that the choice of the expander has a significant impact on system efficiency, net power and fuel-saving at increased coolant temperatures. Since the estimation of engine's performance without the WHR system is outside the scope of this work, effect of higher coolant temperatures on the engine performance is not addressed here. The effect of superheating at HP expander's inlet in DS setup is illustrated in Figure 5. Similar to the SS setup, very minimal effect is observed on the system efficiency. System efficiency slightly increases until 105K and then stabilizes due to the maximum pressure and temperature limits. In the DS model, LP pump speed is controlled to maintain the temperature at LP expander's inlet that is set equal to the initial engine coolant temperature (unlike controlling superheating by the HP pump's speed). Therefore, it is to be noted that the degree of superheating of the working fluid has only been varied at the HP expander's inlet and not at the LP expander's inlet.

4.3 Comparison between SS WHR and DS WHR

In the system with only exhaust as the heat source, system efficiency achieved with expanders A and B, at their optimum speeds, are around 8%; estimated fuel-saving with expanders A and B are around 4.5%. However, it is interesting to note that that system efficiency achieved with dual heat sources is less than the one achieved with only engine exhaust as the heat source. The maximum system efficiency possible with the chosen conditions are around 6% with both expanders A and B. It is to be understood that it is because of the different definitions used for calculating system efficiency for SS and DS setup (Equations 2 and 5). Therefore, the real impact could be estimated in terms of net power and fuel-saving. The condensing pressure has an effect on the power produced by the expanders in SS and DS circuits. In the SS setup, expander outlet pressure is 2.5 bar. Whereas, in the DS setup, pressure at expanders' outlet is 3.97 bar. Since both the LP and HP expanders are connected to the same condenser, LP circuit's lower PRs set some limit on the HP circuit's PRs. Despite this limitation, the advantage of having more heat sources leads to gaining more power than from the single heat source. This is reflected in the amount of fuel-saving in the vehicle; with increased number of heat sources, i.e., using the DS system, fuel-saving is improved from 4.6% (SS) to 5% (DS) with expander A, and from 4.5% (SS) to 5.3% (DS), with expander B. The results support having a greater number of heat sources for waste heat recovery, since improving the fuel economy is the major motive in HD long-haulage truck engines.

5. CONCLUSIONS

- On comparing the SS and DS heat recovery setup, the net power is significantly improved when engine coolant is added as the second heat source, provided the engine coolant temperature is elevated to 120°C and above. This leads to improved fuel-saving with dual heat sources.
- For the chosen conditions, with dual (low temperature and high temperature) heat sources, around 5.7% and 5.5% fuel-savings are achieved with expanders A and B, respectively; an improvement by 0.4% points (A) and 0.8% points (B), when compared to the single high temperature heat source.
- The optimum coolant temperatures for higher fuel-savings are 150ºC (expander A) and 130ºC (expander B).
- Net power from the HP circuit in the DS system is reduced by 1kW due to higher condensing pressure caused by the higher cooling demand from both the circuits.
- Contribution from the LP circuit (engine coolant) is lower than from the HP circuit (Exhaust) due to (a) lower heat input and (b) lower system efficiency (due to lower temperature of the heat source).
- At increased superheating temperatures (between 30K to 170K), only around 0.5% points improvement is observed in the overall system efficiency of both the SS and DS circuits. Optimizing expander speeds for each superheating degree might exhibit some considerable improvement in system efficiency.
- In the future, optimal expander displacement volumes and built-in volume ratios would be analyzed with different control strategies for the system.

NOMENCLATURE

$\dot{W}$	Power	(Watt)
HP	High Pressure	(–)
LP	Low Pressure	(–)
HT	High Temperature	(–)
LT	Low Temperature	(–)
Sys_{eff}	System Efficiency	(%)
$\dot{m}$	Mass flow rate	(kg/s)
$\dot{Q}$	Heat Transfer	(Watt)
h	Enthalpy	(J/kg.K)
N	Speed	(rpm)
FS	Fuel saving	(%)
BVR	Built-in Volume Ratio	(-)
BSFC	Brake Specific fuel consumption	(g/kW)

Subscript

exp	Expander
exh	Exhaust
in	Inlet
out	Outlet
SS	Single Source
DS	Dual Source
eng	Engine
Cool	Coolant
s	Specific
eng2coolant	Engine to coolant

REFERENCES

Giuffrida, A., 2014, Modelling the performance of a scroll expander for small organic Rankine cycles when changing the working fluid, *Applied Thermal Engineering*, 70, 1040 – 1049.

Imran, M., Usman, M., Park, B. S., Lee, D. H., 2016, Volumetric Expanders for Low Grade Heat and Waste Heat Recovery Applications, *Renewable and Sustainable Energy Reviews* 57: 1090–1109. http://dx.doi.org/10.1016/j.rser.2015.12.139.

Lemort V., Declaye S., Quoilin S., 2011, Experimental characterization of a hermetic scroll expander for use in a micro-scale Rankine cycle, *Journal of Power and Energy*, Proc. IMechE Vol. 226.

Lemort V., Quoilin S., Cuevas C., Lebrun J., 2009, Testing and modeling a scroll expander integrated into an Organic Rankine Cycle, *Applied Thermal Engineering 29, 3094–3102.*

Roy, J. P., M. K. Mishra, and Misra, A., 2010, Parametric Optimization and Performance Analysis of a Waste Heat Recovery System Using Organic Rankine Cycle, *Energy* 35(12): 5049–62. http://dx.doi.org/10.1016/j.energy.2010.08.013.

Ziviani D., Beyene A., Venturini M., 2014, Advances and challenges in ORC systems modeling for low grade thermal energy recovery, *Applied Energy 121 (2014) 79–95.*

Arunachalam P. N., Shen M., Tuner M., Tunestal P., Thern M., 2012, Waste Heat Recovery from Multiple Heat Sources in a HD Truck Diesel Engine Using a Rankine Cycle - A Theoretical Evaluation, *SAE 2012 International Powertrains, Fuels & Lubricants Meeting,* ISSN 0148-7191.

Dickes R, Ziviani D, De Paepe M, van den Broek M, Quoilin S, Lemort V., 2016, ORCmKit: an open-source library for organic Rankine cycle modelling and analysis, *Proceedings of ECOS 2016 : The 29th International Conference on Efficiency, Cost, Optimization, Simulation and Environmental impact of energy systems,* p. 1–14.

Espinosa N., Tilman L., Lemort V., Quoilin S., Lombard B., 2010, Rankine cycle for waste heat recovery on commercial trucks: approach, constraints and modelling, *Proceedings of SIA diesel international conference and exhibition.*

Grelet, V., Reiche, T., Guillaume, L., Lemort, V., 2014, Optimal waste heat recovery Rankine based for heavy-duty applications, *35th FISITA world automotive congress*, F2014-CET-151.

Latz, G., Andersson, S., Munch, K., 2013, Selecting an Expansion Machine for Vehicle Waste-Heat Recovery Systems Based on the Rankine Cycle, *SAE Technical paper 2013-01-0552,* doi:10.4271/2013-01-0552.

Kenneth, E., Nichols, P.E., 2012, How to Select Turbomachinery for your Application, http://www.barbernichols.com/resources.

GT-Power User's Manual*, GT-Suite version 2018. Gamma Technologies Inc.*

ACKNOWLEDGEMENT

This project is funded by the Swedish Energy Agency through the Competence Centre for Gas Exchange (CCGEx) at KTH Royal Institute of Technology, Sweden, and is a collaboration among industries and universities in Sweden.