5th International Seminar on ORC Power Systems
Athens Greece
09-11 September 2019

Design of an Experimental ORC Expander Setup Using Natural Working Fluids

NTNU
Norwegian University of Science and Technology

Ángel Á. Pardiñas (angel.a.pardinas@ntnu.no), Marcin Pilarczyk, Roberto Agromayor and Lars O. Nord

NTNU - Norwegian University of Science and Technology, Department of Energy and Process Engineering, Trondheim, Norway

Motivation

Future restrictions on working fluids justify the need for further research on ORC expanders using natural fluids. There is a lack of experimental data in the open literature for this combination of expanders and natural working fluids. In response to this knowledge gap, NTNU has designed and is building EXPAND, an experimental setup to characterize expanders in the 25–100 kW power capacity using natural working fluids and their mixtures.

System requirements and concept (Figure 1)

- Steady state facility.
- Expander power output: 25 – 100 kW.
- Natural working fluids and their mixtures.
- Flexibility (pressure ratios, mass flow rates, working fluids).
- Low-to-medium temperature of waste heat source < 150 °C.
- 1 bar < operating pressure < 20 bar (absolute).
- Gas phase operation (↓ fluid charge, ↓ cooling/heating needs).

Working fluid selection

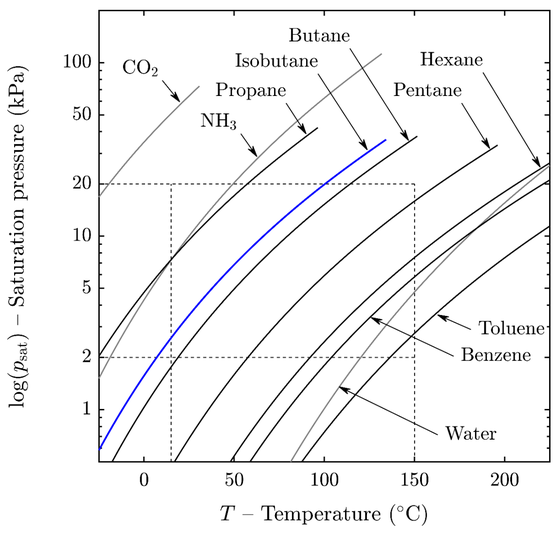

Figure 2. Saturation pressure and temperature of several natural working fluids and feasible operation region of the test rig.

Suitable natural working fluids are those with p_{sat}-T curves falling within the rectangle defined by [15 °C, 150 °C] and [2 bar, 20 bar].

Isobutane as starting point.

Recuperator to reduce the cooling and heating capacities of the auxiliary loops.

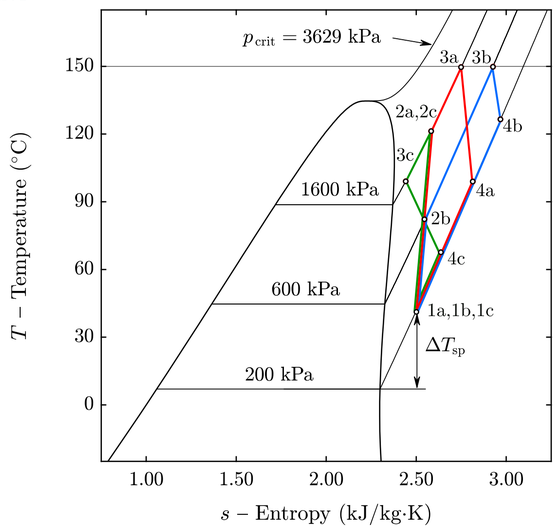

Figure 3. T-s diagram of the test rig with isobutane and pressure ratio of 3 (blue) and pressure ratio of 8 (red and green).

Acknowledgement

This publication has been partly funded by HighEFF - Centre for an Energy Efficient and Competitive Industry for the Future, an 8-year Research Centre under the FME-scheme (Centre for Environment-friendly Energy Research, 257632). The authors gratefully acknowledge the financial support from the Research Council of Norway and user partners of HighEFF.

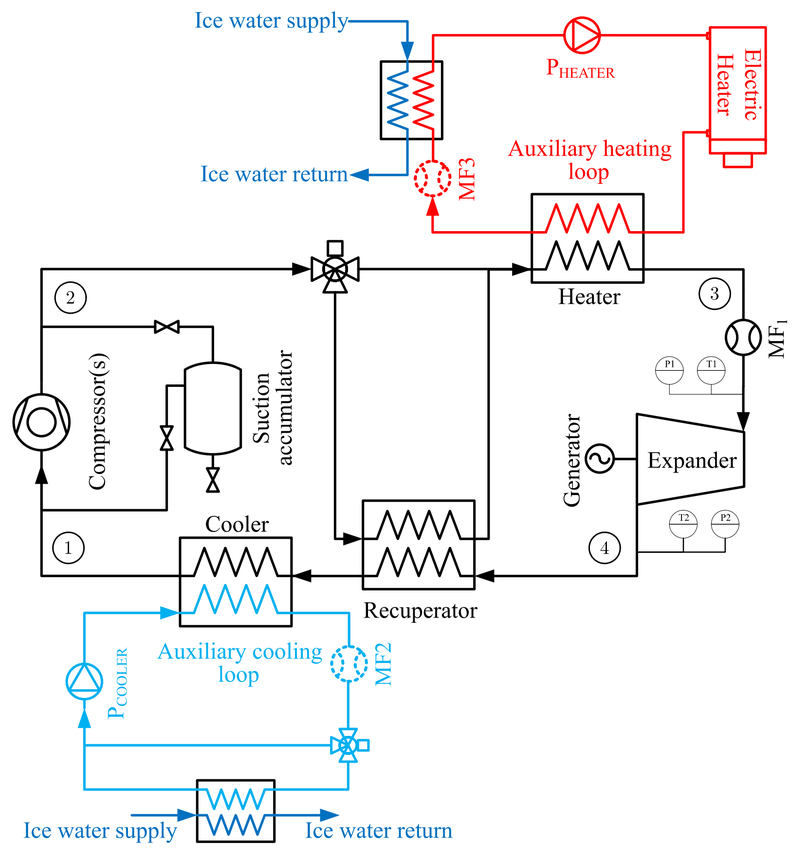

Figure 1. Process flow diagram of the EXPAND test rig.

Expander and compressors

Expander

- Setup for volumetric and dynamic expanders.
- 1st approach: single-stage, axial turbine (≈ 50 kW) by ENOGIA.
- Coupled to frequency converter.
  - Variable-speed operation.
  - Supply the power generated from the expander to the compressors, reducing the power need from the grid.

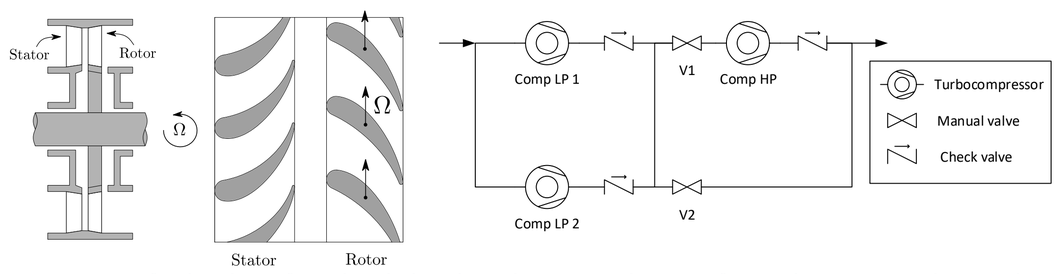

Figure 4. Left, sketches of axial-radial and axial-tangential views of a single-stage, axial expander. Right, turbocompressor arrangement used in EXPAND.

Compressors

- Turbocompressors are more compact, lighter and silent than volumetric machines. No oil separation challenge.
- Flexibility with turbocompressor arrangement:
  1. Low pressure lift - high mass flow rate mode.
  2. High pressure lift - low mass flow rate mode.

Conclusions

- EXPAND was designed to operate in the gas phase to reduce the heating and cooling duties as well as the charge of working fluid.
- The working fluid for the first experimental campaign is isobutane (R600a) because it allows for operation with a broad range of pressure ratios within the pressure constraints.
- The expander architecture for the first experimental campaign is a variable-speed, single-stage, axial turbine.